CENTER OF MASS

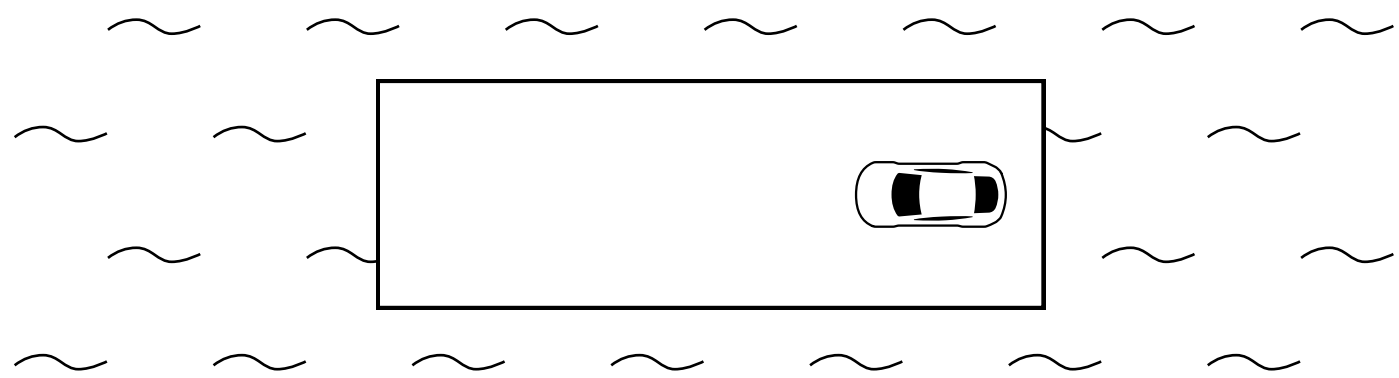

1. A car is at rest on a raft which is floating at rest in the water as shown in the top-down view in the figure above. The raft can slide through the water and the friction between the raft and the water is negligible. The car then drives to the left end of the raft and stops. After the car stops, which of the following is true?

   (A) The raft and the car are moving to the left
   (B) The raft and the car are moving to the right
   (C) The raft and the car are not moving
   (D) The final motion of the raft and the car cannot be determined without knowing their masses

2. Two blocks are on a surface with negligible friction. Block 1 slides towards block 2 and they stick together and move to the right. During the collision the speed of the center of mass of the system

   (A) increases
   (B) does not change
   (C) decreases
   (D) the change in the speed of the center of mass of the system cannot be determined

3. Two blocks are connected by a compressed spring and are sliding together to the right on a surface with negligible friction at time t_1. Some time later at time t_2 the spring expands and pushes the blocks apart. Some time later at time t_3 the blocks are moving in opposite directions. Which of the following could be a graph of the velocity of the center of mass of the blocks-spring system if right is considered the positive direction?

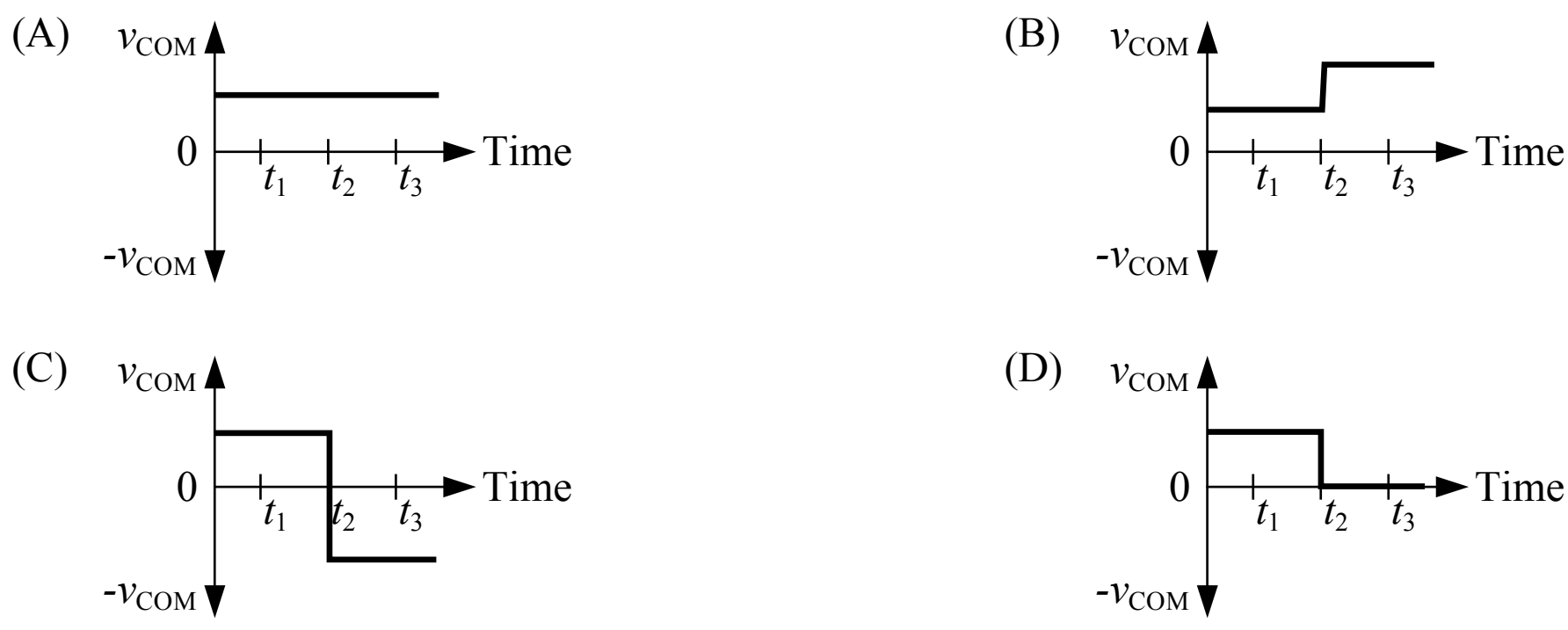

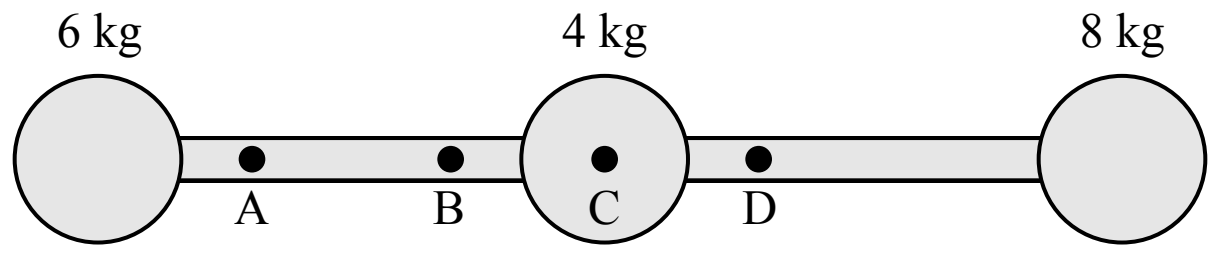

4. A system consists of a three spheres connected by two rods with equal length and uniform mass as shown in the figure above. The center of mass of the system is closest to which of the points shown?

(A) Point A

(B) Point B

(C) Point C

(D) Point D

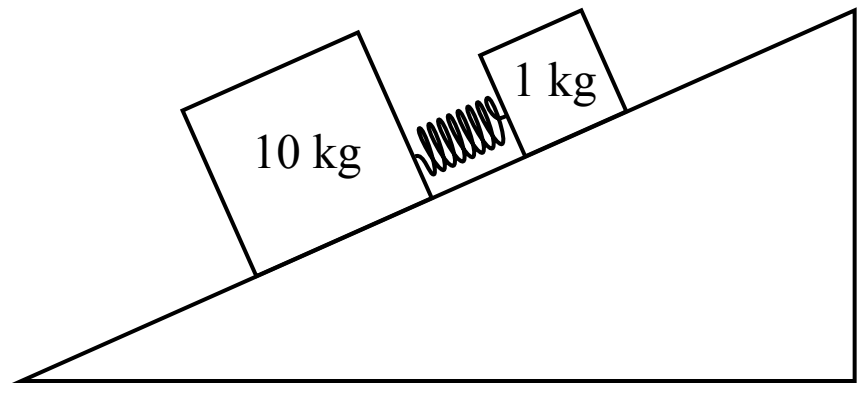

5. Two blocks are connected by a spring and placed on an incline with negligible friction. The blocks are held so that the spring is initially compressed. The blocks are then released from rest and they move apart from each other due to the spring. After the blocks are released, the location of the center of mass of the blocks-spring system

(A) will move up the incline

(B) will move down the incline

(C) will not move

(D) the motion of the center of mass cannot be determined

6. Two blocks are separated by a compressed spring with negligible mass and are held at rest on a frictionless surface. The blocks are released at time t_1. The spring expands and the 2 kg block loses contact with the spring at time t_2 and the spring remains attached to the 10 kg block. Which of the following shows the acceleration of the center of mass of the system of the two blocks and the spring?

(A)
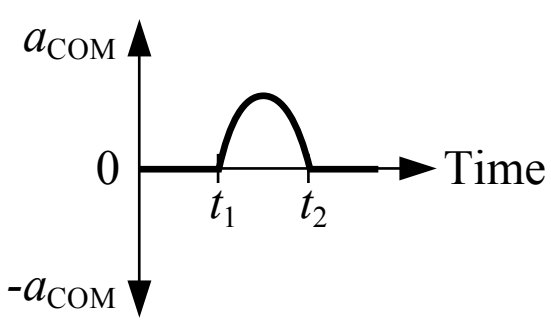

(B)
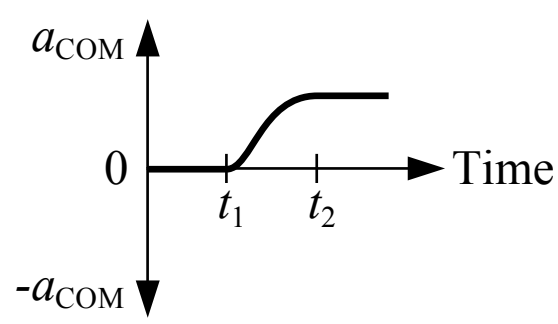

(C)
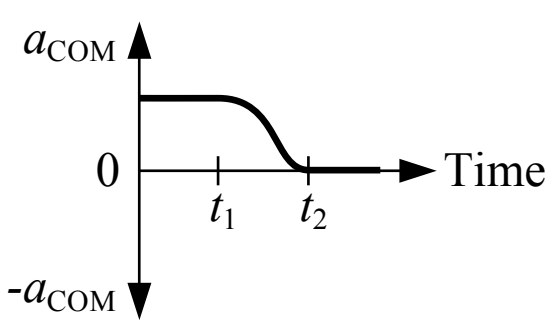

(D)
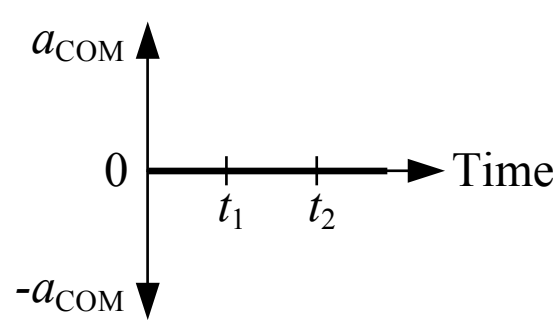

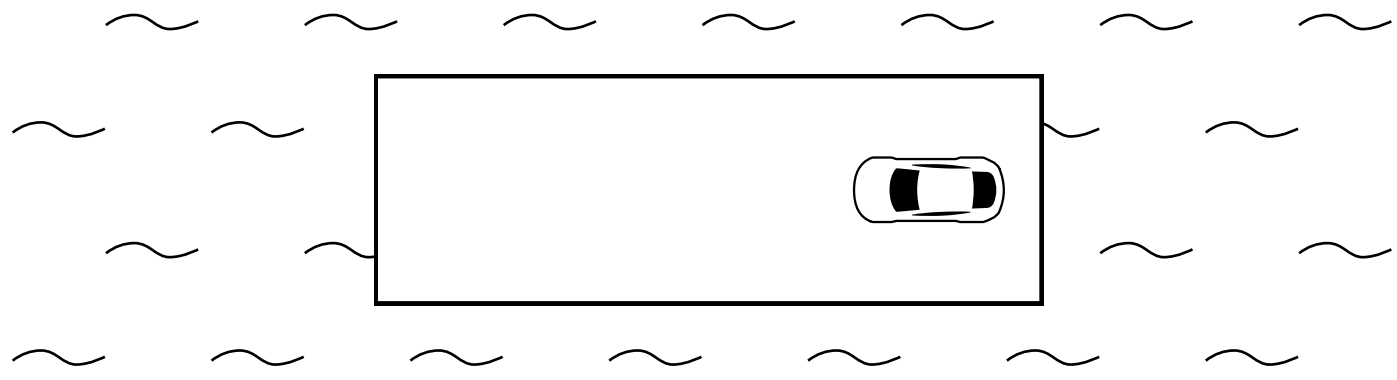

1. A car is at rest on a raft which is floating at rest in the water as shown in the top-down view in the figure above. The raft can slide through the water and the friction between the raft and the water is negligible. The car then drives to the left end of the raft and stops. After the car stops, which of the following is true?

   (A) The raft and the car are moving to the left
   (B) The raft and the car are moving to the right
   (C) The raft and the car are not moving
   (D) The final motion of the raft and the car cannot be determined without knowing their masses

A Incorrect

B Incorrect

C **Correct**
The friction force acting on the raft from the water is negligible. If we consider the system of the car and the raft, there are no external forces acting on the system in the horizontal direction so the acceleration of the system's center of mass is zero (Newton's 1st law of motion). The center of mass of the system is initially at rest so the center of mass will remain at rest, and the raft and the car are not moving after the car stops.

D Incorrect

2. Two blocks are on a surface with negligible friction. Block 1 slides towards block 2 and they stick together and move to the right. During the collision the speed of the center of mass of the system

(A) increases
(B) does not change
(C) decreases
(D) the change in the speed of the center of mass of the system cannot be determined

A Incorrect

B **Correct**
If we consider the system of the two blocks, there are no external forces acting on the system in the horizontal direction so the acceleration of the system's center of mass is zero and the velocity of the center of mass does not change (Newton's 1st law of motion).

C Incorrect

D Incorrect

3. Two blocks are connected by a compressed spring and are sliding together to the right on a surface with negligible friction at time t_1. Some time later at time t_2 the spring expands and pushes the blocks apart. Some time later at time t_3 the blocks are moving in opposite directions. Which of the following could be a graph of the velocity of the center of mass of the blocks-spring system if right is considered the positive direction?

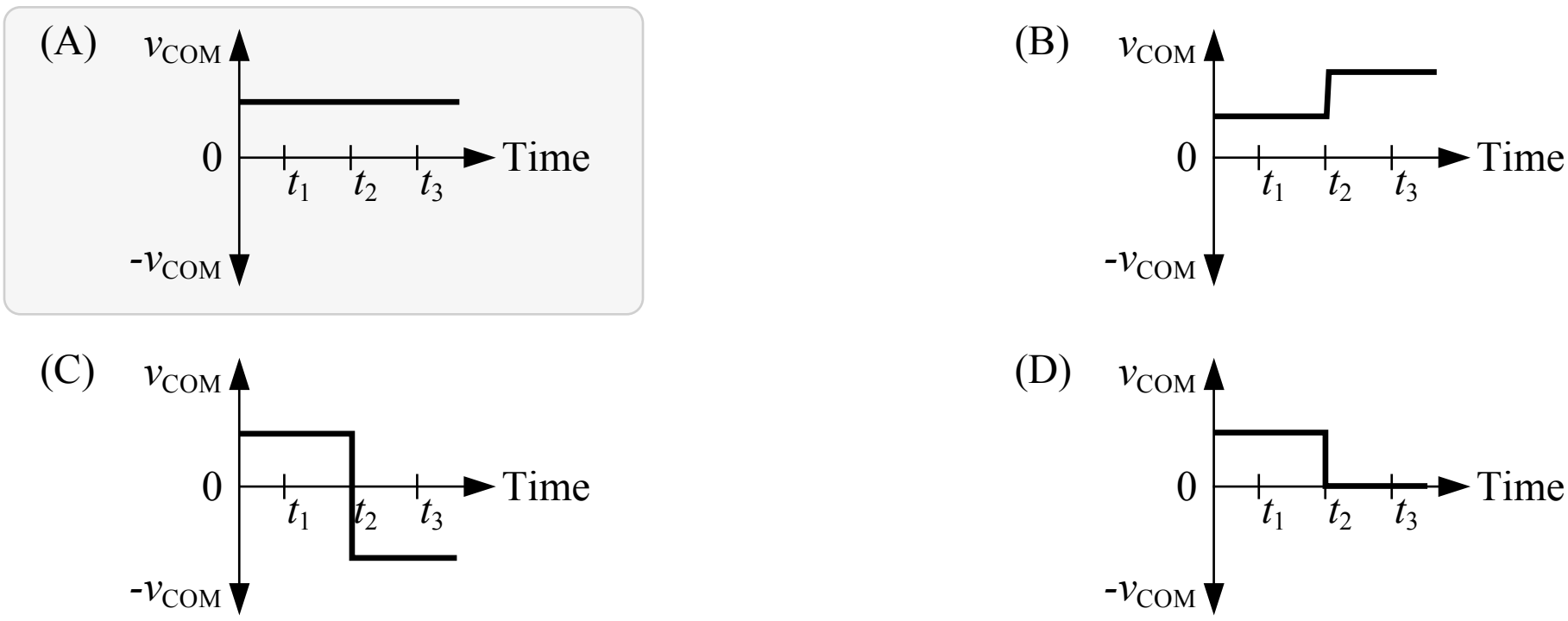

A **Correct**
The blocks are sliding on a frictionless surface. If the system is defined as the two blocks and the spring then there are no external forces acting on the system in the horizontal direction (the spring force is an internal force) so the acceleration of the system's center of mass is zero and the velocity of the center of mass does not change (Newton's 1st law of motion). The center of mass will continue moving to the right at the same speed.

B Incorrect

C Incorrect

D Incorrect

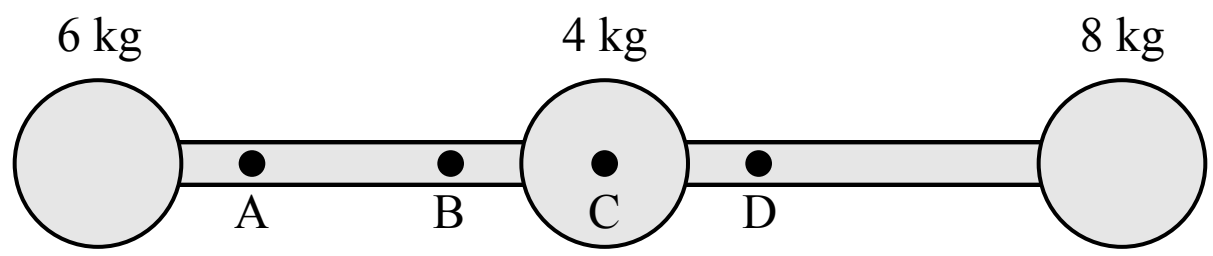

4. A system consists of a three spheres connected by two rods with equal length and uniform mass as shown in the figure above. The center of mass of the system is closest to which of the points shown?

(A) Point A
(B) Point B
(C) Point C
(D) Point D

A Incorrect

B Incorrect

C Incorrect

D **Correct**
The center of mass of a system depends on the position and mass of each object, or the distribution of the mass of a single object. If the spheres at the right and left end of the rods had the same mass then the center of mass of the system would be at point C. The right sphere has a greater mass so the center of mass is closer to the right sphere than the center.

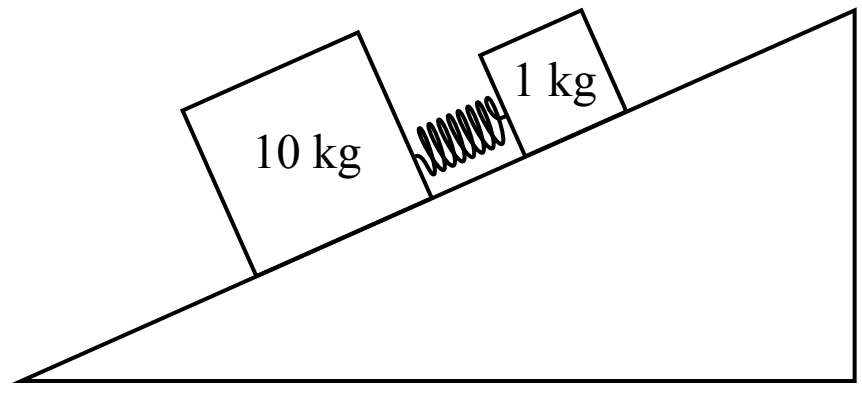

5. Two blocks are connected by a spring and placed on an incline with negligible friction. The blocks are held so that the spring is initially compressed. The blocks are then released from rest and they move apart from each other due to the spring. After the blocks are released, the location of the center of mass of the blocks-spring system

(A) will move up the incline
(B) will move down the incline
(C) will not move
(D) the motion of the center of mass cannot be determined

A Incorrect

B **Correct**
The system is defined as the two blocks and the spring. The spring force acting on the blocks is an internal force. There is no friction force acting on the blocks but there is a weight force acting on each block, so the net external force acting on the system is equal to the total weight force and is not zero. The weight force acts vertically downwards and there is a component of the weight force which is parallel to the incline, so the center of mass of the system accelerates down the incline.

C Incorrect

D Incorrect

6. Two blocks are separated by a compressed spring with negligible mass and are held at rest on a frictionless surface. The blocks are released at time t_1. The spring expands and the 2 kg block loses contact with the spring at time t_2 and the spring remains attached to the 10 kg block. Which of the following shows the acceleration of the center of mass of the system of the two blocks and the spring?

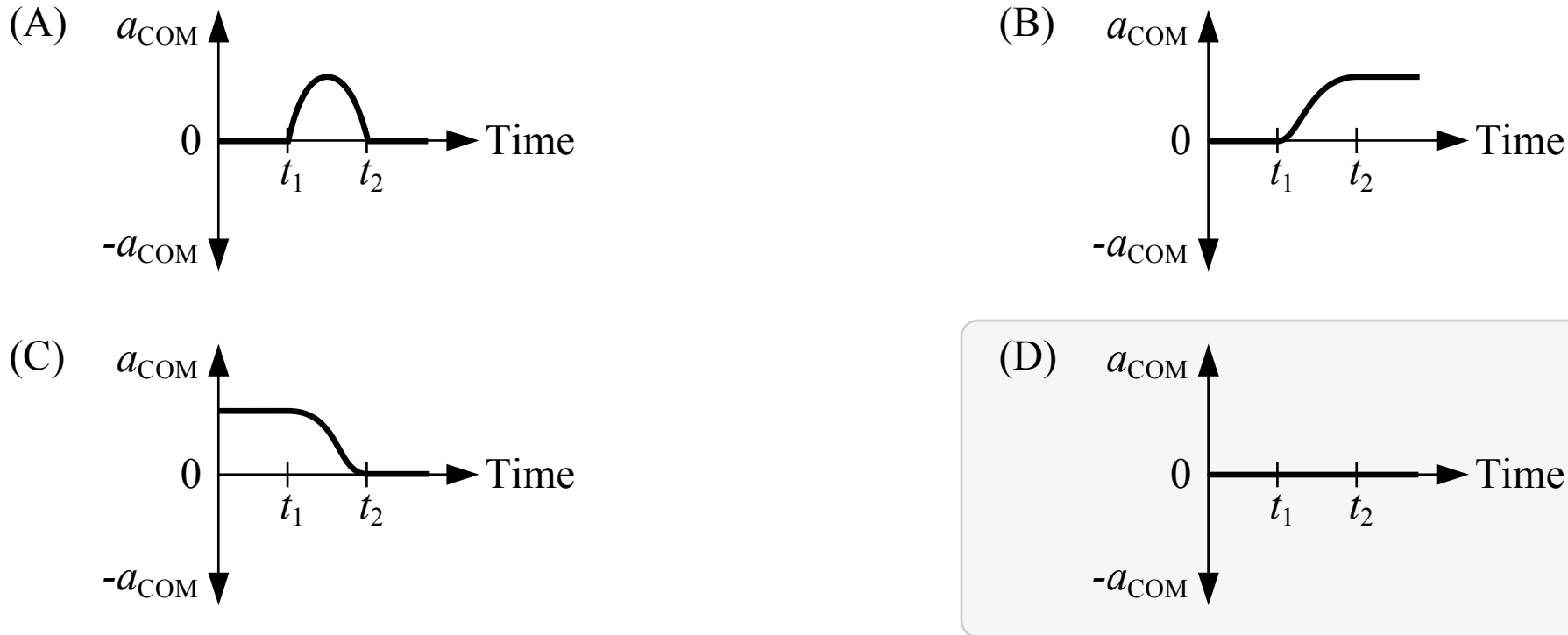

A Incorrect

B Incorrect

C Incorrect

D Correct

The system is defined to include both blocks and the spring so the spring force that acts on each block is an internal force and not an external force. Only a net external force will cause a system's center of mass to accelerate (Newton's 1st law of motion) so this system's center of mass does not accelerate, and it remains in the same position because the system is initially at rest.